Small, diffuse reflective type with long sensing distance

▣ Features

- Realization of long sensing distance (2m) by special optical design
- Protection structure IP64(IEC standard)
- Built-in stability indicator
- Includes sensitivity adjustment function
- 2 color LED display



⚠ **Please read "Caution for your safety" in operation manual before using.**

▣ Specifications

Model	NPN open collector	**BA2M-DDT**	**BA2M-DDTD**
	PNP open collector	**BA2M-DDT-P**	**BA2M-DDTD-P**
Sensing type		Diffuse reflective	
Sensing distance		2m(Non-glossy white paper 200×200mm)	
Sensing target		Translucent, opaque materials	
Hysteresis		Max. 20% at sensing distance	
Response time		Approx. 1ms	
Power supply		12-24VDC ±10%(Ripple P-P : Max. 10%)	
Current consumption		Max. 15mA(Max. 30mA when the output is ON)	
Light source		Infrared LED(850nm)	
Sensitivity adjustment		Built-in the adjustment VR	
Operation mode		Light ON	Dark ON
Control output		NPN or PNP open collector output ●Load voltage : Max. 26.4VDC ●Load current : Max. 100mA ●Residual voltage - NPN : Max. 1V, PNP : Min. 2.5V	
Protection circuit		Reverse polarity protection, output short-circuit protection	
Indicator		●Operation indicator : red ●Stability indicator : orange(Light ON), green(Dark ON)	
Insulation resistance		Min. 20MΩ(at 500VDC megger)	
Noise resistance		±240V the square wave noise(pulse width : 1μs) by the noise simulator	
Dielectric strength		1000VAC 50/60Hz for 1minute	
Vibration		1.5mm amplitude or 300m/s^2 at frequency of 10 to 55Hz(for 1 min.) in each of X, Y, Z directions for 2 hours	
Shock		100m/s^2(approx. 10G) in each of X, Y, Z directions for 3 times	
Environment	Ambient illumination	Sunlight : Max. 11,000lx, Incandescent lamp : Max. 3,000lx(Receiving illumination)	
	Ambient temperature	-25 to 55℃, storage : -25 to 70℃	
	Ambient humidity	35 to 85%RH, storage : 35 to 85%RH	
Protection		IP64(IEC standard)	
Material		Case: ABS, Sensing part: PC, Indicator: PC, VR: IXEF	
Cable		ø3, 3-wire, Length : 2m (AWG24, Core diameter: 0.08mm, Nunber of cores: 40, Insulator out diameter: ø1)	
Accessory		VR adjustment driver	
Approval		CE	
Unit weight		Approx. 50g	

※The temperature or humidity mentioned in Environment indicates a non freezing or condensation environment.

Diffuse Reflective type with Long Sensing Distance

■ Feature data

Sensing area characteristic

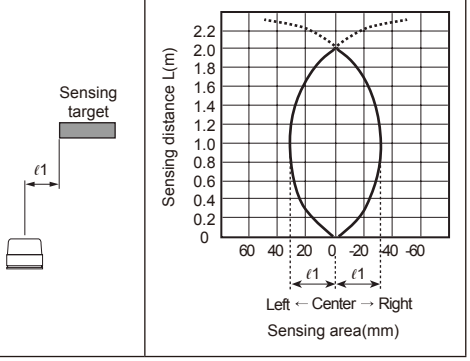

Sensing distance against the target size

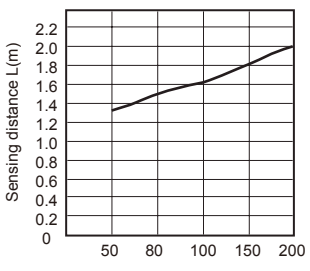

(Standard targets : 200×200mm)

Sensing distance against the target color

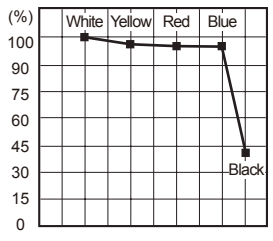

In case non-glossy white paper is 100%

■ Control output diagram

● NPN open collector output

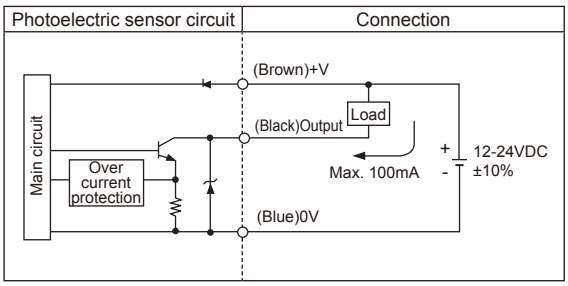

● PNP open collector output

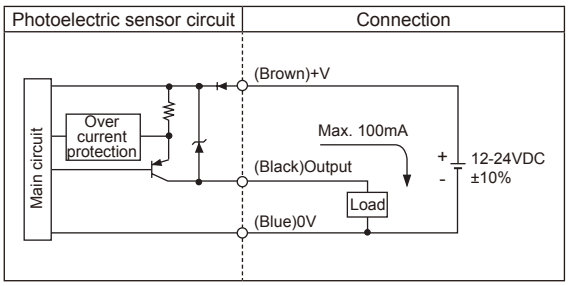

■ Connections

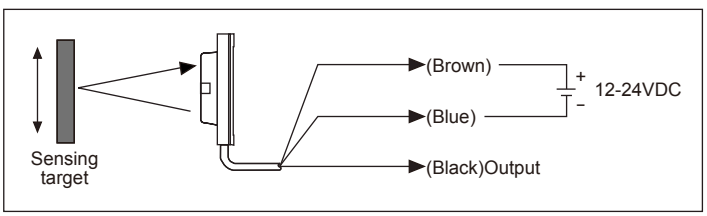

■ Dimensions

(unit: mm)

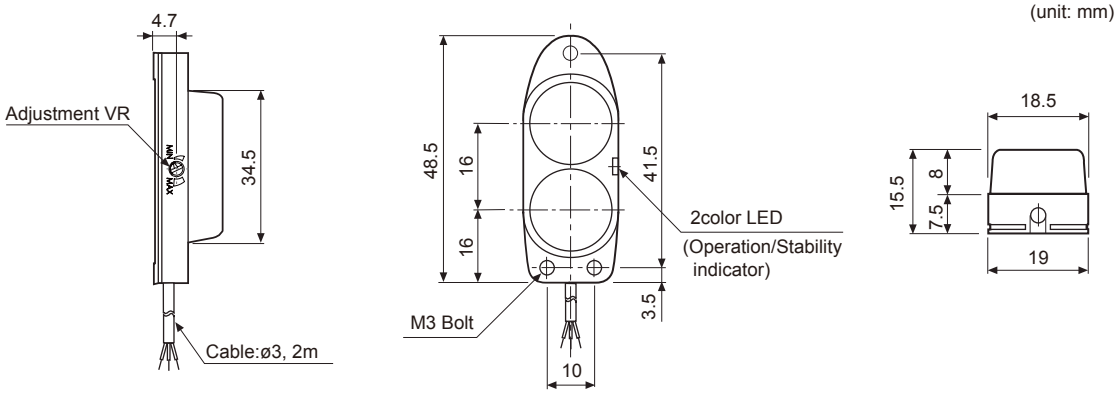

▣ Operation mode

If the control output terminal is short-circuit or over current than the rated current flows the unit, the sensor does not operate normally by protection circuit.

● Light ON

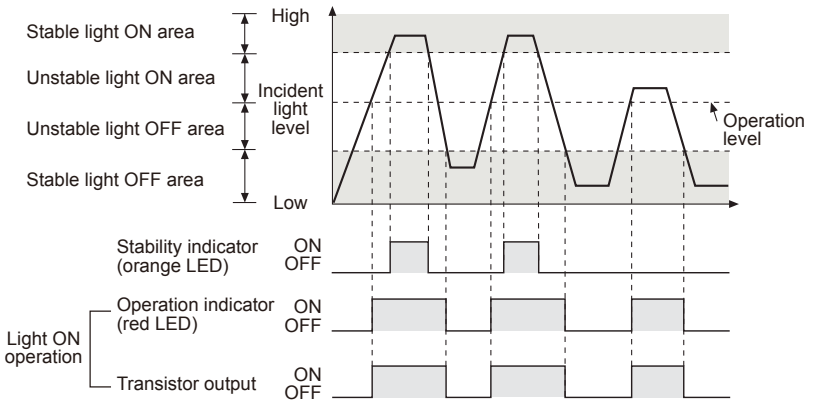

(Control output according to amount of receiving light)

● Dark ON

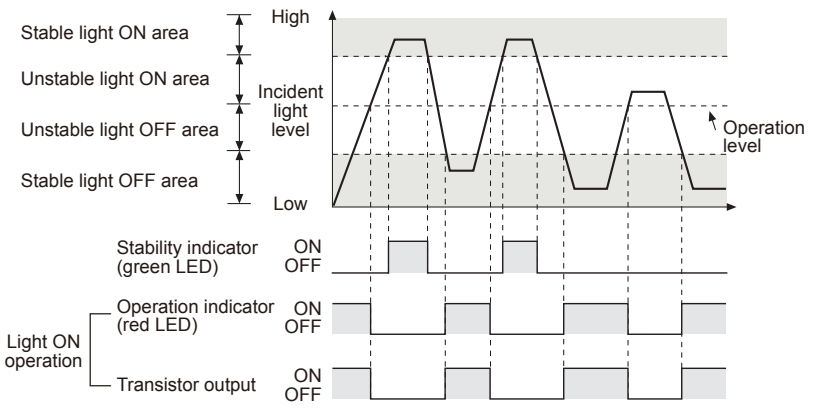

(Control output according to amount of receiving light)

▣ Mounting and sensitivity adjustment

Install the sensor to the desired place and check the connections.
Supply the power to the sensor and adjust the optical axis and the sensitivity as follow ;

● Optical axis adjustment

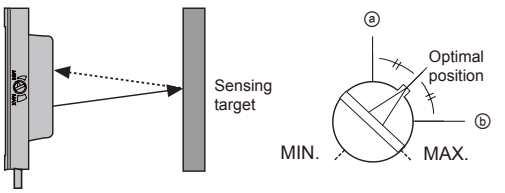

Mount this unit at center position where the stability indicator turns ON as moving the unit toward right or left, up or down.

● Adjustment

1. When sensing the object, set the sensitivity adjustment VR in stable Light ON area(orange: Light On, green: Dark On) as shown '▣ **Operation mode**'.
2. The sensitivity should be adjusted depending on a sensing target or mounting place.
3. Set the target at a position to be detected by the beam, then turn the adjustment VR until position ⓐ where the operation indicator turns ON from min. position of the adjustment VR.
4. Take the target out of the sensing area, then turn the adjustment VR until position ⓑ where the the operation indicator turns ON. If the indicator dose not turn ON, max. position is ⓑ.
5. Set the adjustment VR at the center of two switching position ⓐ, ⓑ.

※The sensing distance indicated on specification chart is for 200×200mm of non-glossy white paper. Be sure that it can be different by size, surface and gloss of target.